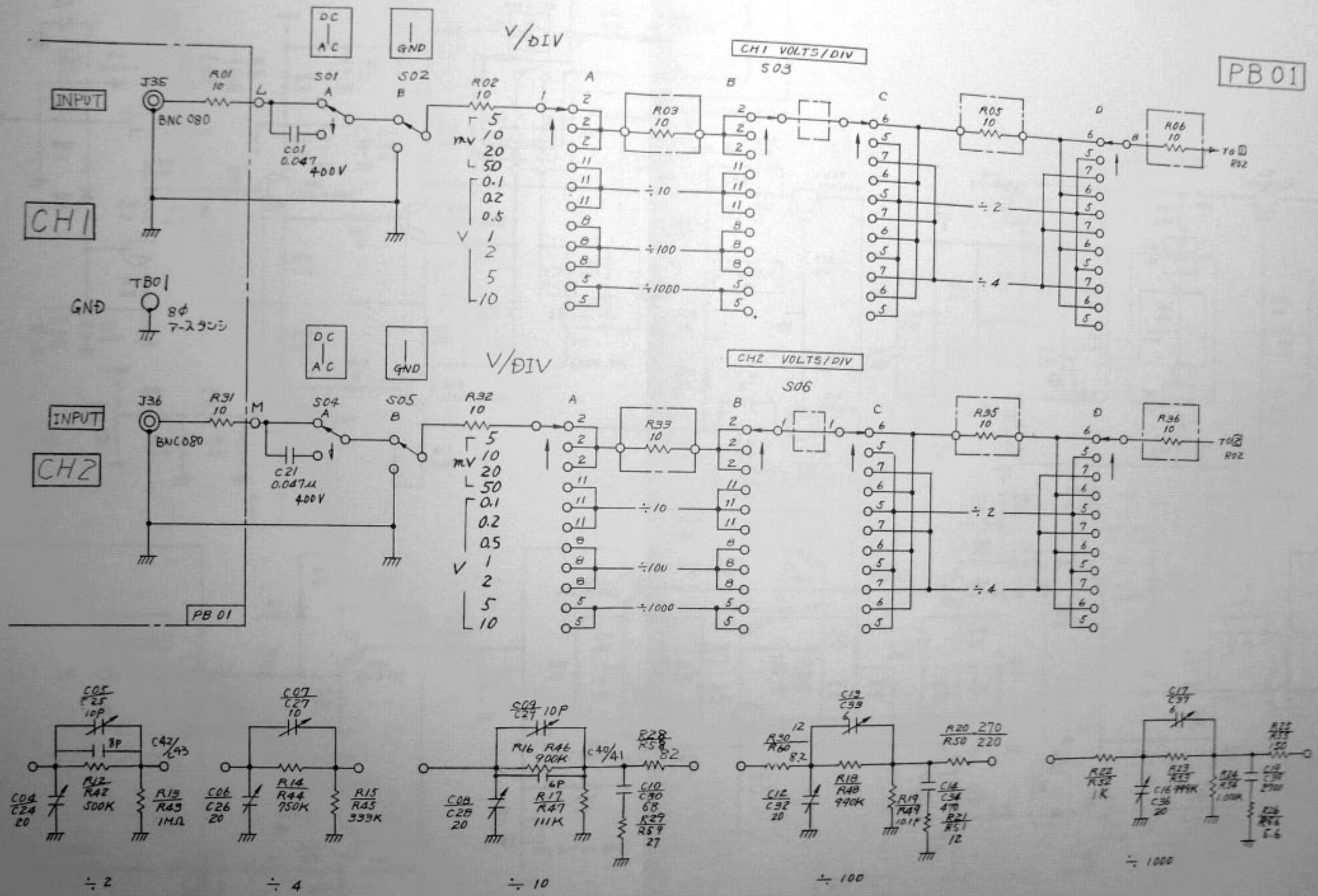

SS-5704/SS-5705

ATTENUATOR

0

KBBSS24049101

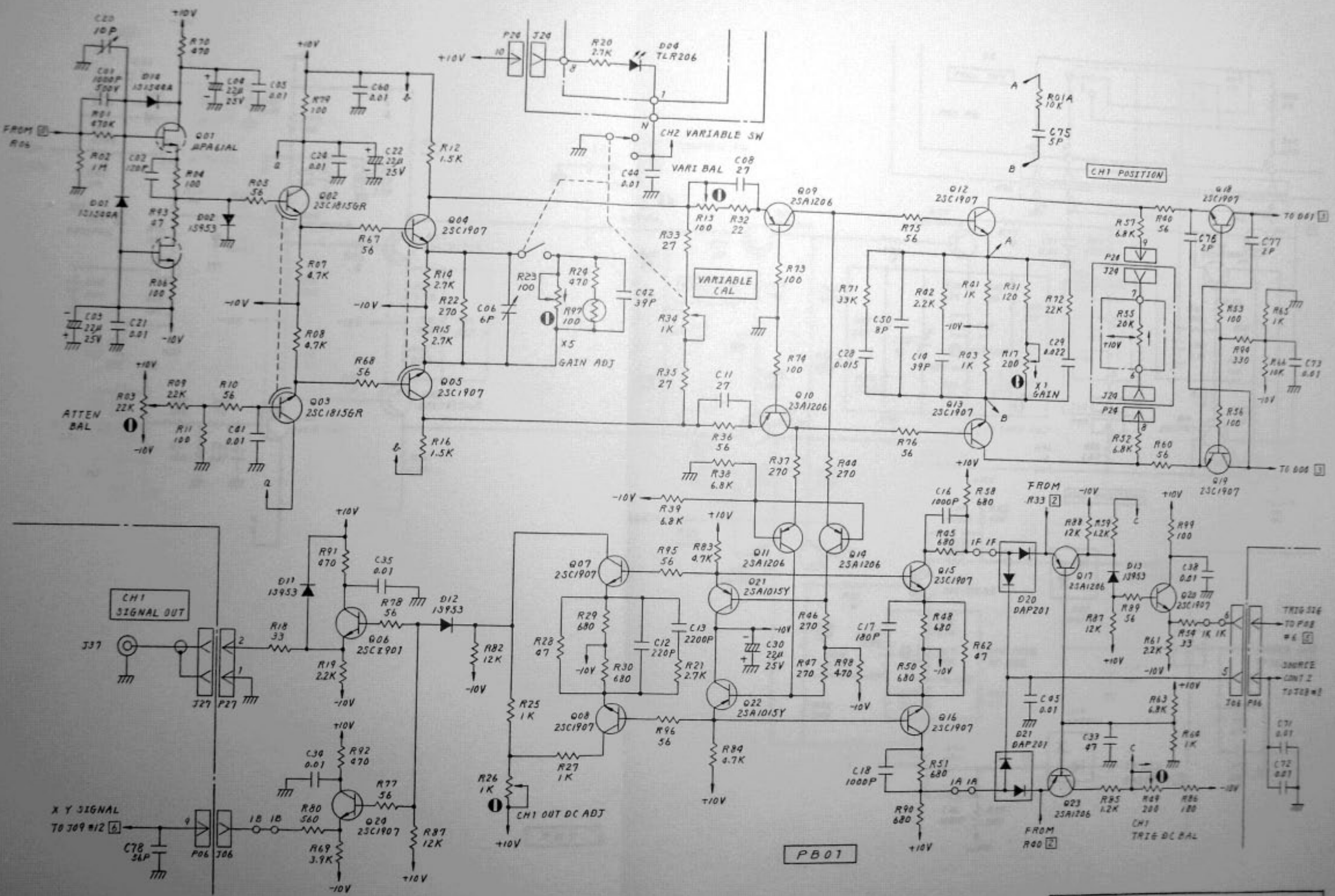

SS-5705

CH1 PREAMPLIFIER 1

KBB SS24050101

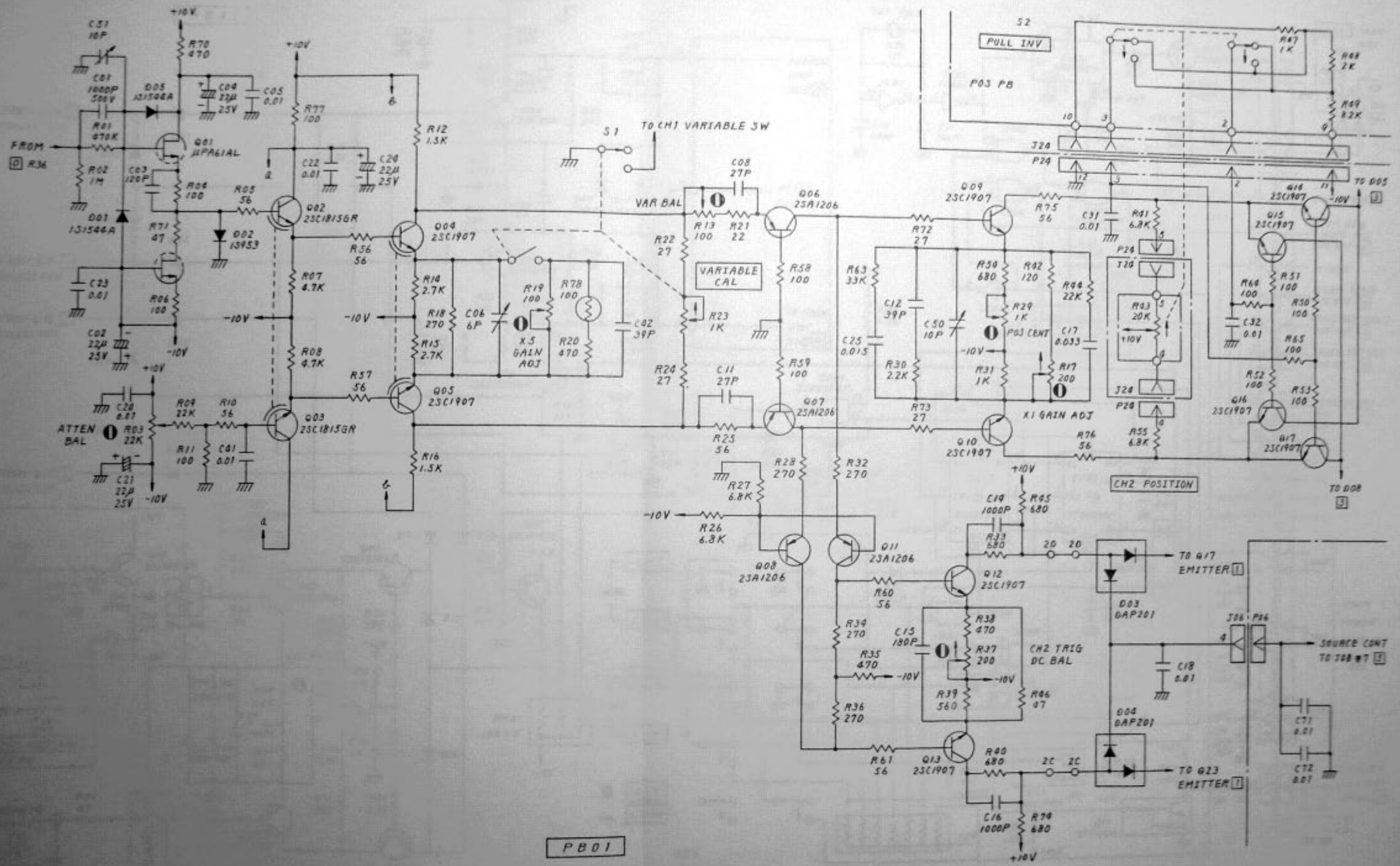

名 称	SS-5705
	CH2 PREAMPLIFIER 2
图 号	KBBSS24051101

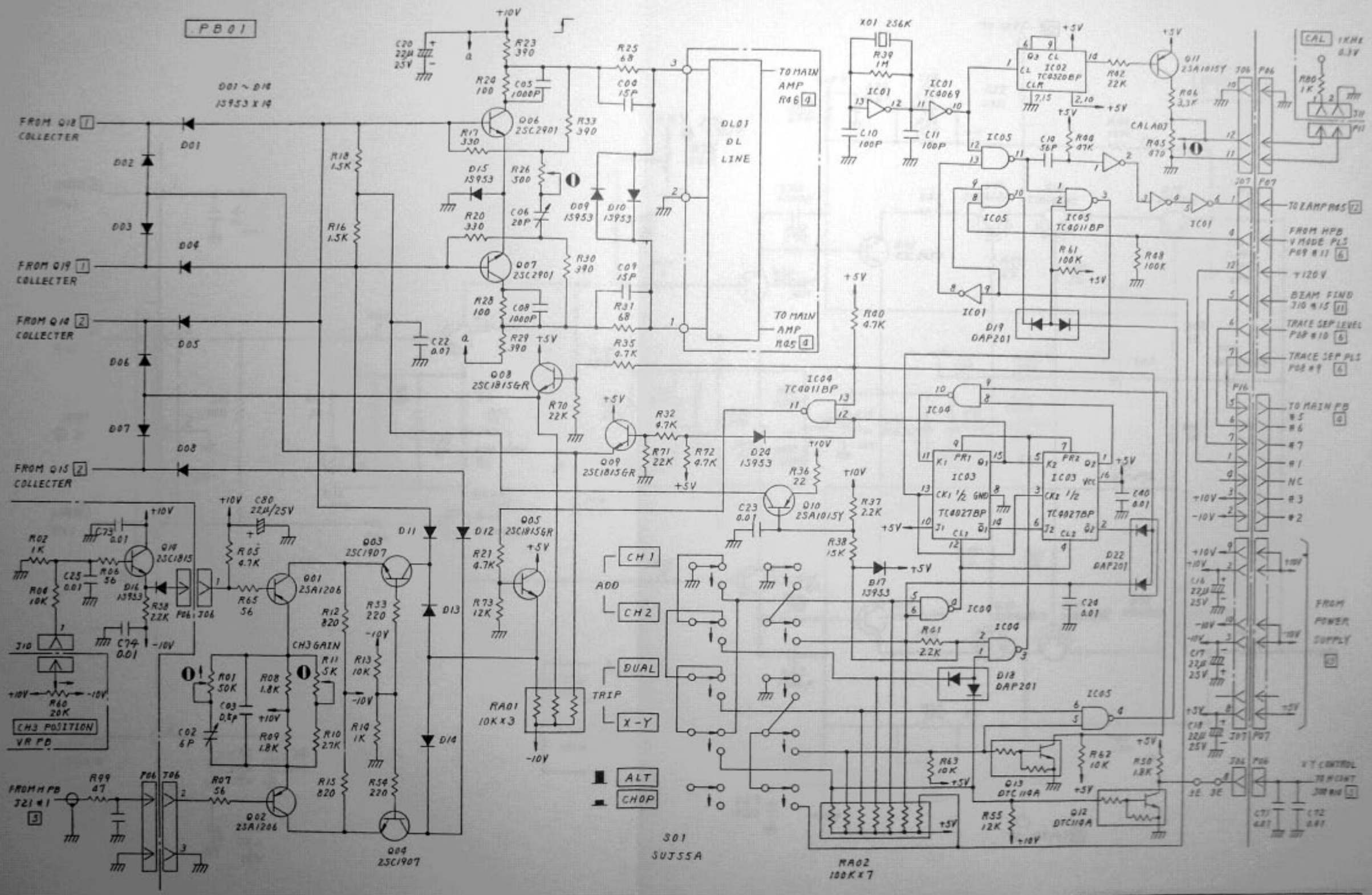
PB01
FROM Q18 COLLECTER
FROM Q19 COLLECTER
FROM Q14 COLLECTER
FROM Q15 COLLECTER
D01 ~ D18
1S953 X 18
DL01
DL
LINE
TO MAIN AMP R46
TO MAIN AMP R45
X01 256K
IC01 TC4069
IC02 TC4520BP
IC03 TC4027BP
IC04 TC4011BP
IC05 TC4011BP
D19 DAP201
D22 DAP201
D18 DAP201
D17 1S953
D24 1S953
D10 2SA1015Y
D11 2SA1015Y
Q03 2SC1907
Q04 2SC1907
Q01 2SA1206
Q02 2SA1206
Q05 2SC1815GR
Q06 2SC2901
Q07 2SC2901
Q08 2SC1815GR
Q09 2SC1815GR
Q14 2SC1815
Q13 DTC114A
Q12 DTC114A
CAL 1KHz 0.3V
CAL ADJ
TO ZAMP R45
FROM HPB V MODE PLS
+120V
BEAM FIND
TRACE SEP LEVEL
TRACE SEP PLS
TO MAIN PB
FROM POWER SUPPLY
FROM H PB
CH3 POSITION
VR PB
CH3 GAIN
CH1
ADD
CH2
DUAL
TRIP
X-Y
ALT
CHOP
S01
SUJ55A
RA01 10KX3
RA02 100KX7
SS-5705
VERTICAL CONTROL 3
KBBSS10010101

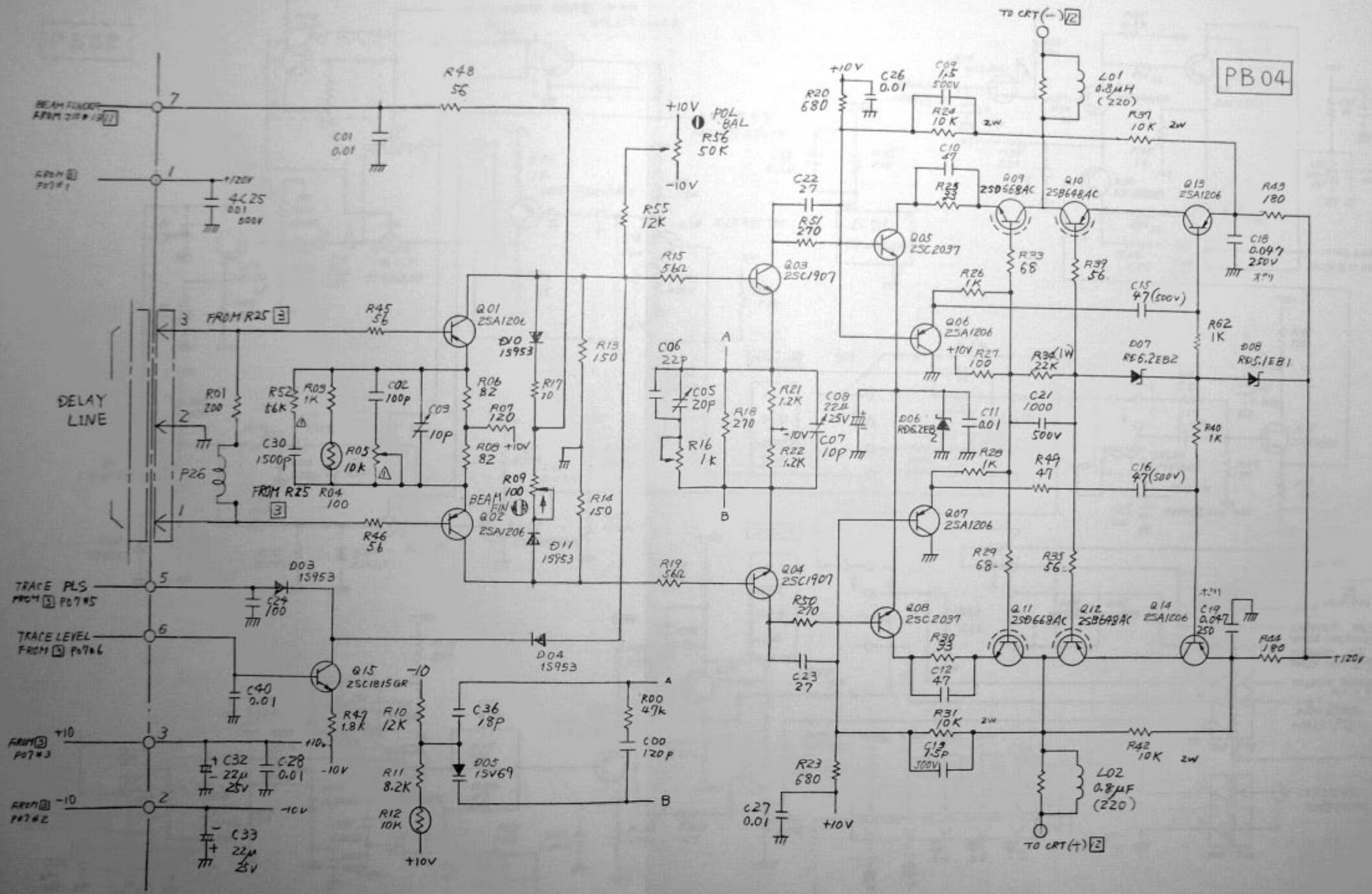

名称 SS-5705

VERTICAL MAIN AMPLIFIER 4

図番 KBBSS24052101

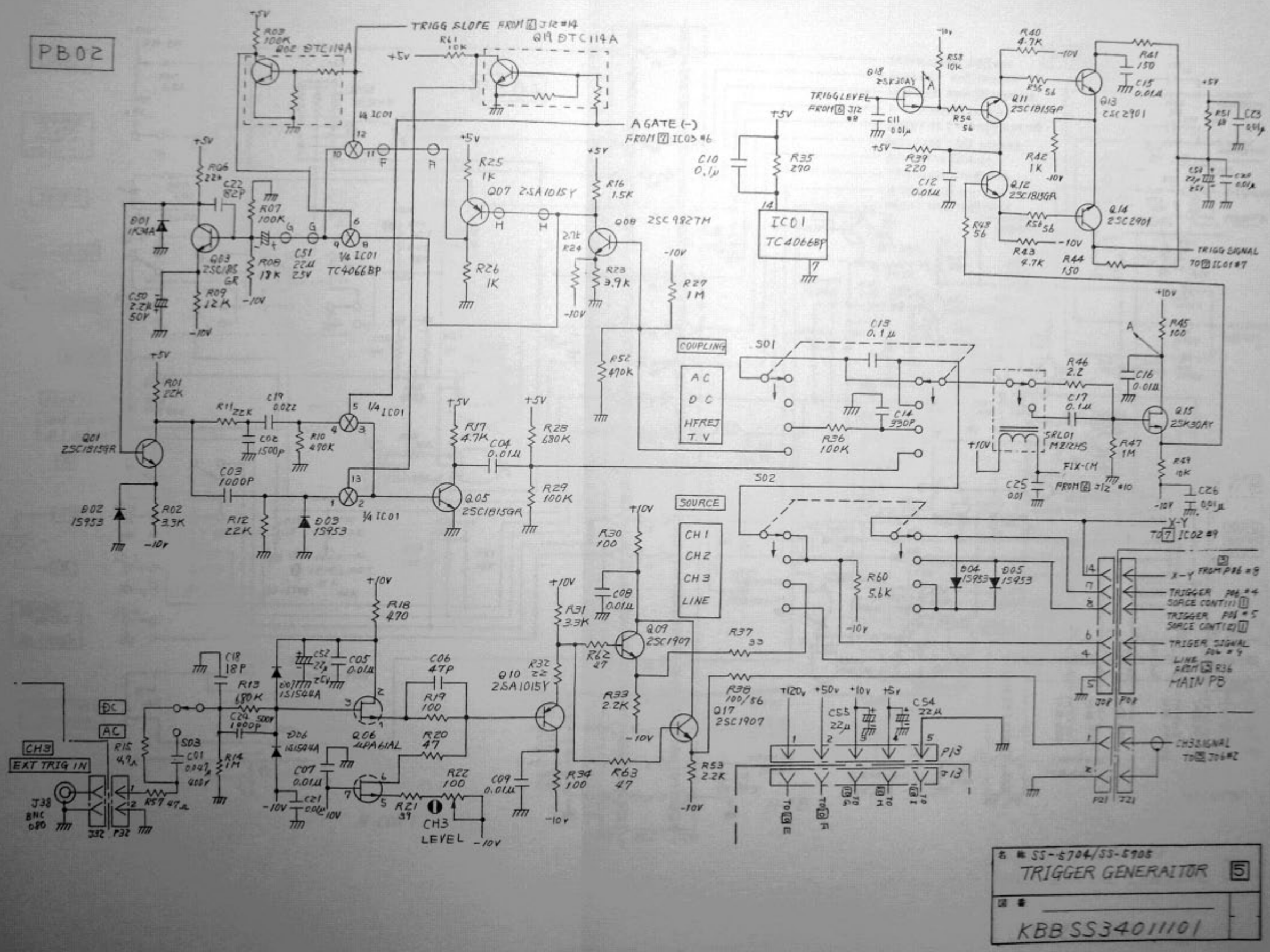
PB02
TRIGG SLOPE FROM 4 J12 #14
Q19 DTC114A
Q02 DTC114A
A GATE (-)
FROM 7 IC03 #6
TRIGG LEVEL FROM 6 J12 #8
TRIGG SIGNAL TO 7 IC01 #7
IC01 TC4066BP
COUPLING
AC
DC
HFREJ
T.V
S01
S02
SOURCE
CH1
CH2
CH3
LINE
EXT TRIG IN
CH3 LEVEL
X-Y TO 7 IC02 #9
FROM P06 #9
TRIGGER SOURCE CONT(1) 1
TRIGGER SOURCE CONT(2) 1
TRIGGER SIGNAL P06 #4
LINE FROM 3 R36
MAIN PB
CH3 SIGNAL TO 3 J06 #2
FIX-CM FROM 6 J12 #10
SS-5704/SS-5905
TRIGGER GENERATOR
5
KBB SS34011101

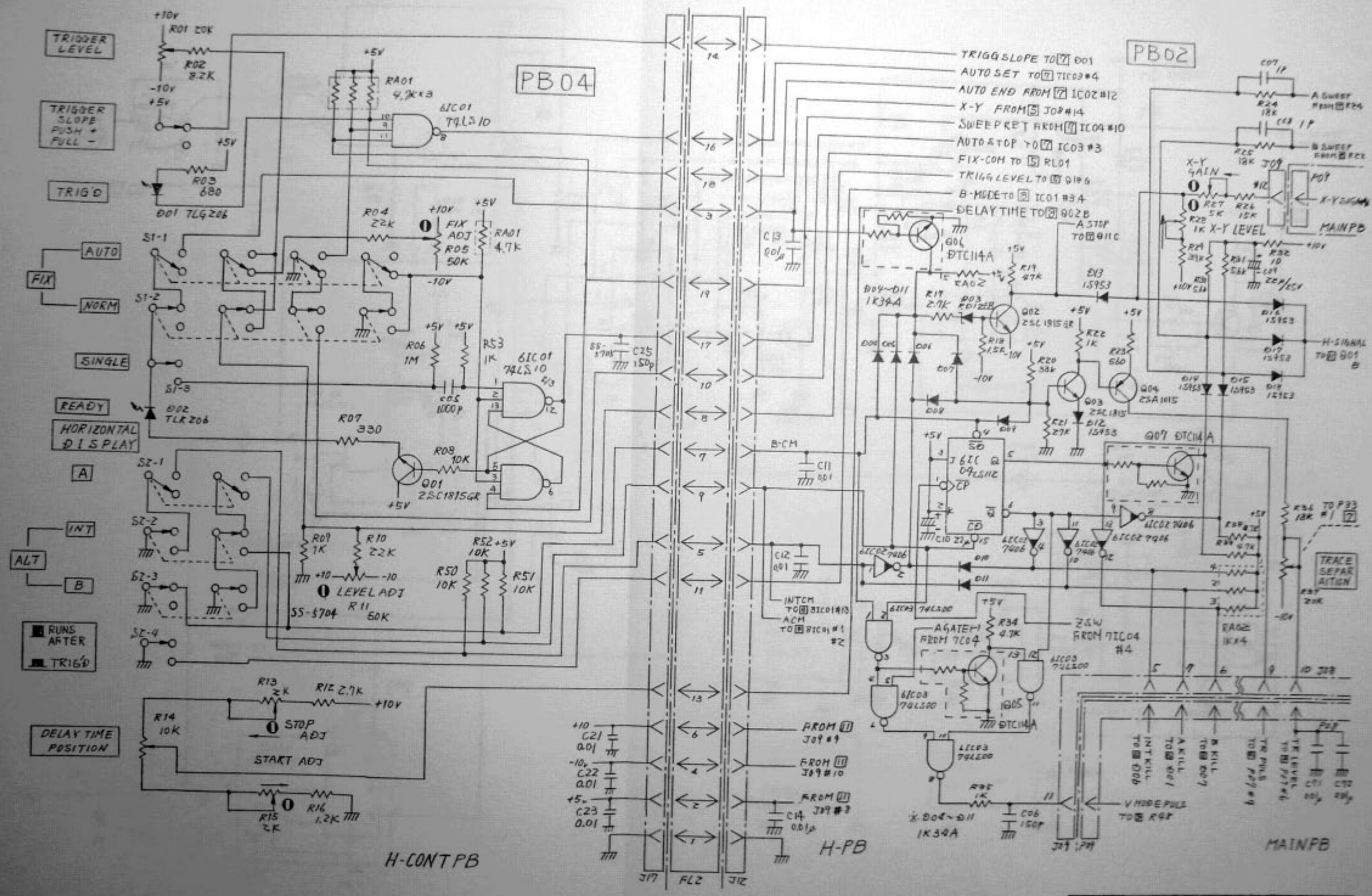
TRIGGER LEVEL
TRIGGER SLOPE PUSH + PULL −
TRIG'D
AUTO
FIX
NORM
SINGLE
READY
HORIZONTAL DISPLAY
A
INT
ALT
B
RUNS AFTER TRIG'D
DELAY TIME POSITION
PB04
PB02
MAINPB
H-CONT PB
H-PB
TRIGG SLOPE TO D01
AUTO SET TO IC03#4
AUTO END FROM IC02#12
X-Y FROM J08#14
SWEEP RET FROM IC04#10
AUTO STOP TO IC03#3
FIX-COM TO RL01
TRIGG LEVEL TO Q19B
B-MODE TO IC01#34
DELAY TIME TO Q02B
A STOP TO Q11C
H-SIGNAL TO Q01 B
TRACE SEPARATION
X-Y GAIN
X-Y LEVEL
LEVEL ADJ
STOP ADJ
START ADJ
SS-5704/SS-5705
HORIZONTAL CONTROL
6
KBBSS10011101

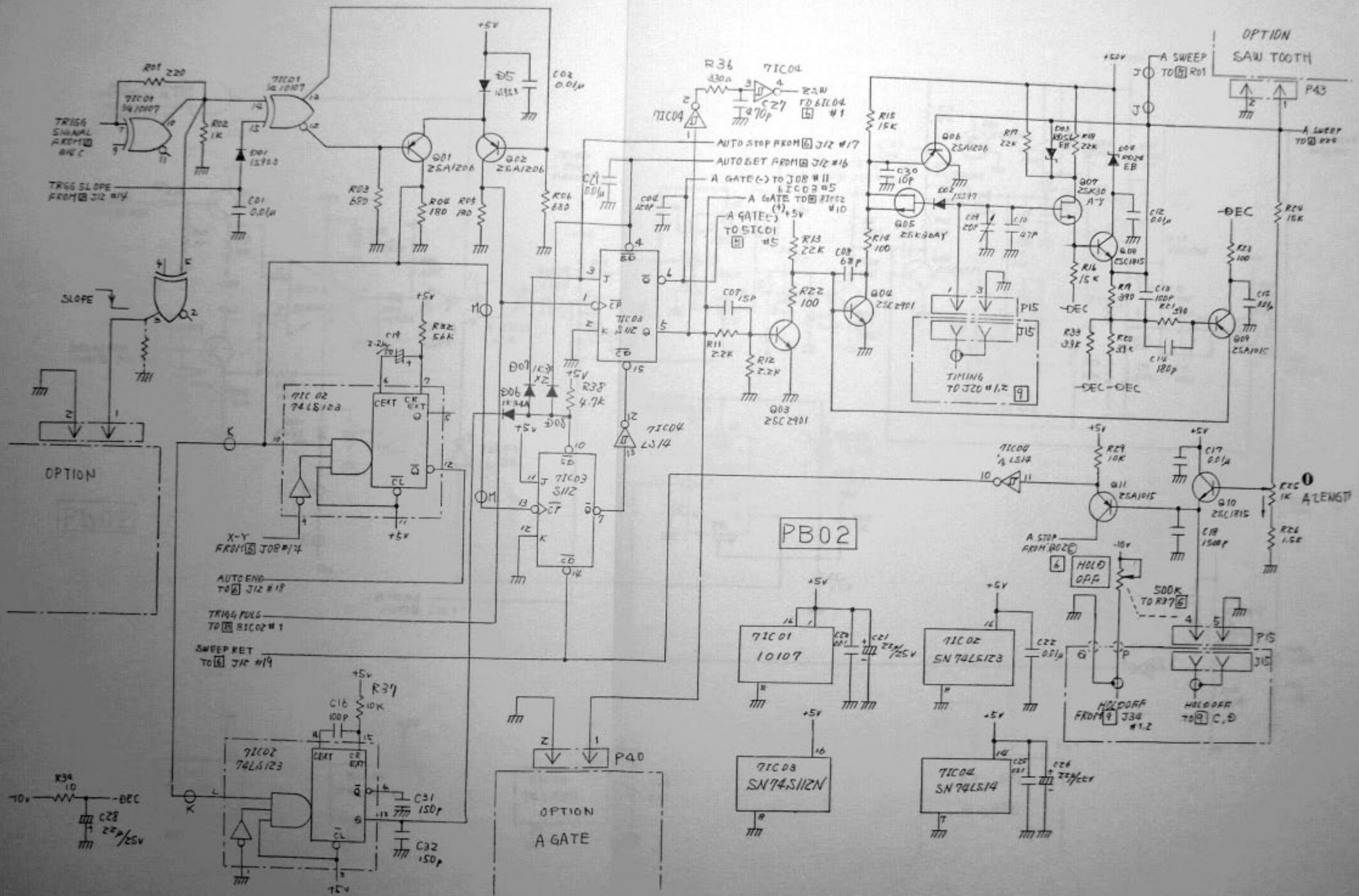
OPTION
SAW TOOTH
P43
A SWEEP TO R01
A SWEEP TO R24
TRIGG SIGNAL FROM 8 BIC
TRGG SLOPE FROM 8 J12 #14
SLOPE
OPTION
AUTO STOP FROM 6 J12 #17
AUTO SET FROM 8 J12 #16
A GATE(-) TO J08 #11 & IC03 #5
A GATE TO 8 IC02 #10
A GATE(-) TO 5 IC01 #5
TIMING TO J20 #1,2
-DEC
PB02
X-Y FROM 5 J08 #14
AUTO END TO 8 J12 #18
TRIGG PULS TO 8 IC02 #1
SWEEP RET TO 8 J12 #19
OPTION
A GATE
P40
A STOP FROM PB02
HOLD OFF
500K TO R37 6
HOLD OFF FROM 9 J34 #1,2
HOLD OFF TO 9 C,D
A LENGTH
SS-5705
A SWEEP GENERATOR
7
KBBSS200231

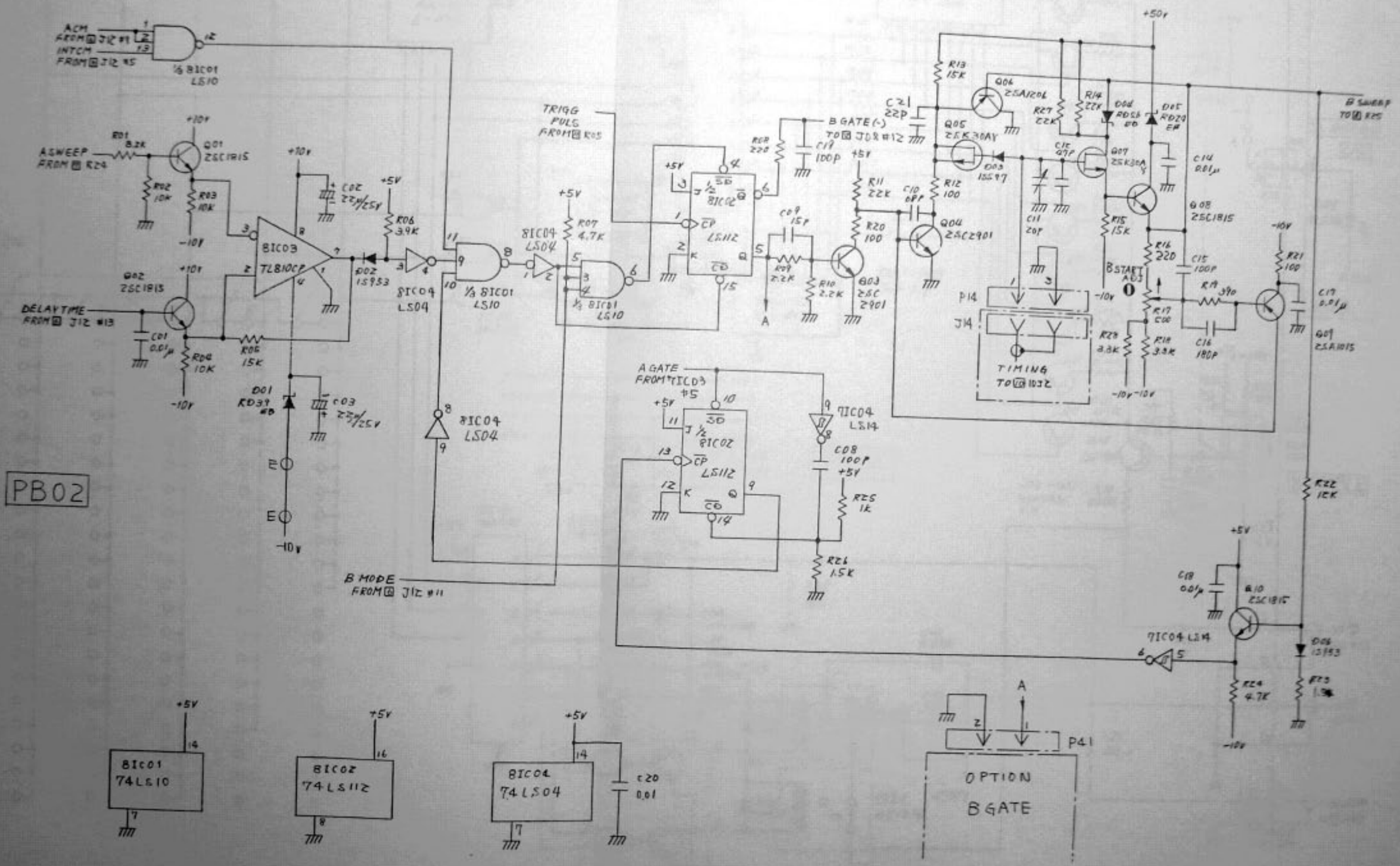

PB02

SS-5704/SS-5705

B SWEEP GENERATOR

8

KBBSS200241

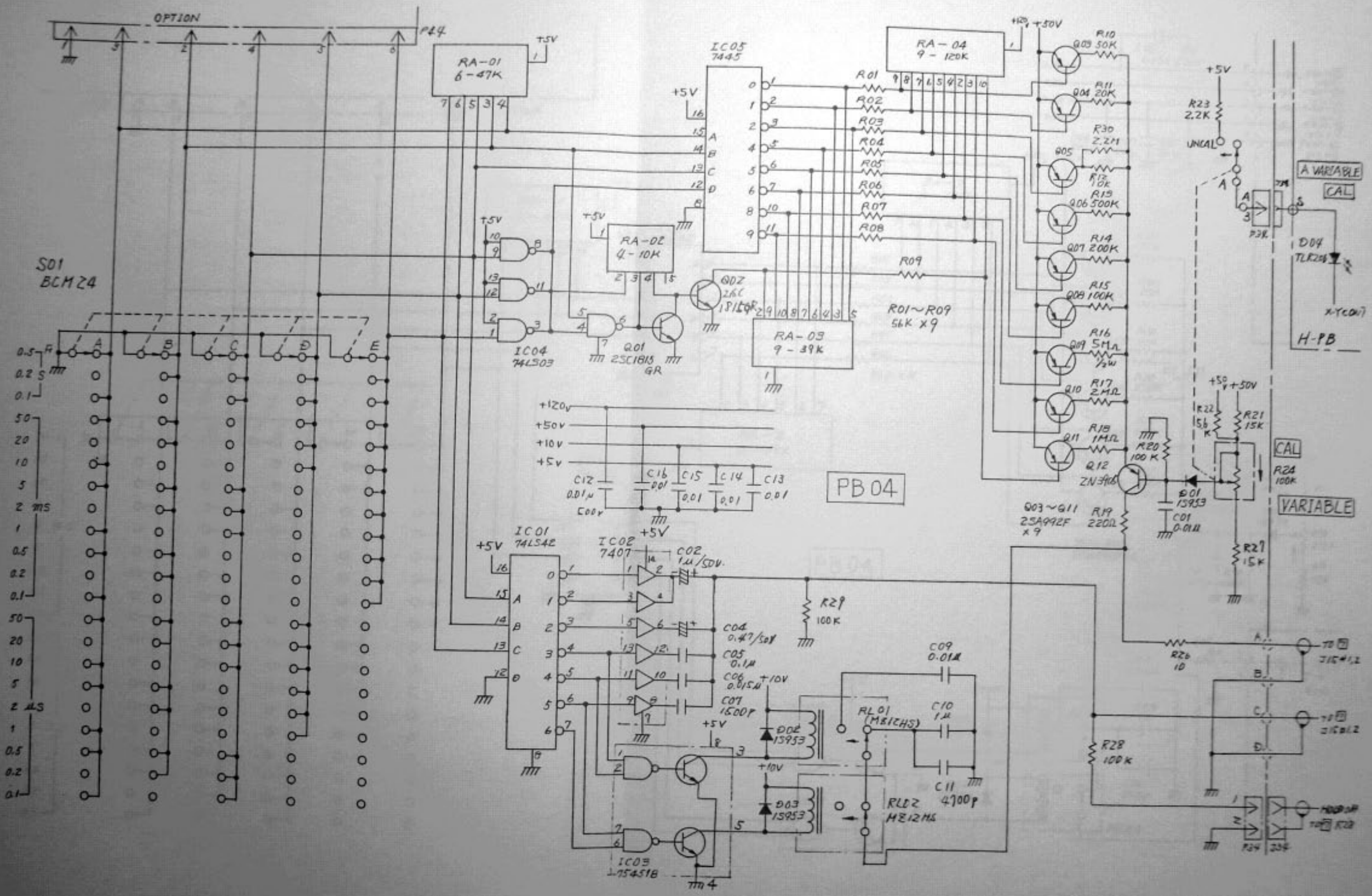
OPTION
P47
RA-01
6-47K
RA-02
4-10K
RA-03
9-39K
RA-04
9-120K
IC05
7445
IC04
74LS03
IC01
74LS42
IC02
7407
IC03
74S51B
S01
BCM24
Q01
2SC1815
GR
Q02
2SC
1815GR
Q03~Q11
2SA992F
x9
Q12
2N3906
R01~R09
56K x9
PB04
A VARIABLE
CAL
H-PB
VARIABLE
UNCAL
D04
TLR206
X-TCON7
RL01
(M812HS)
RL02
M812HS
SS-5704/SS-5705
A TIMING
9
KBB SS200251

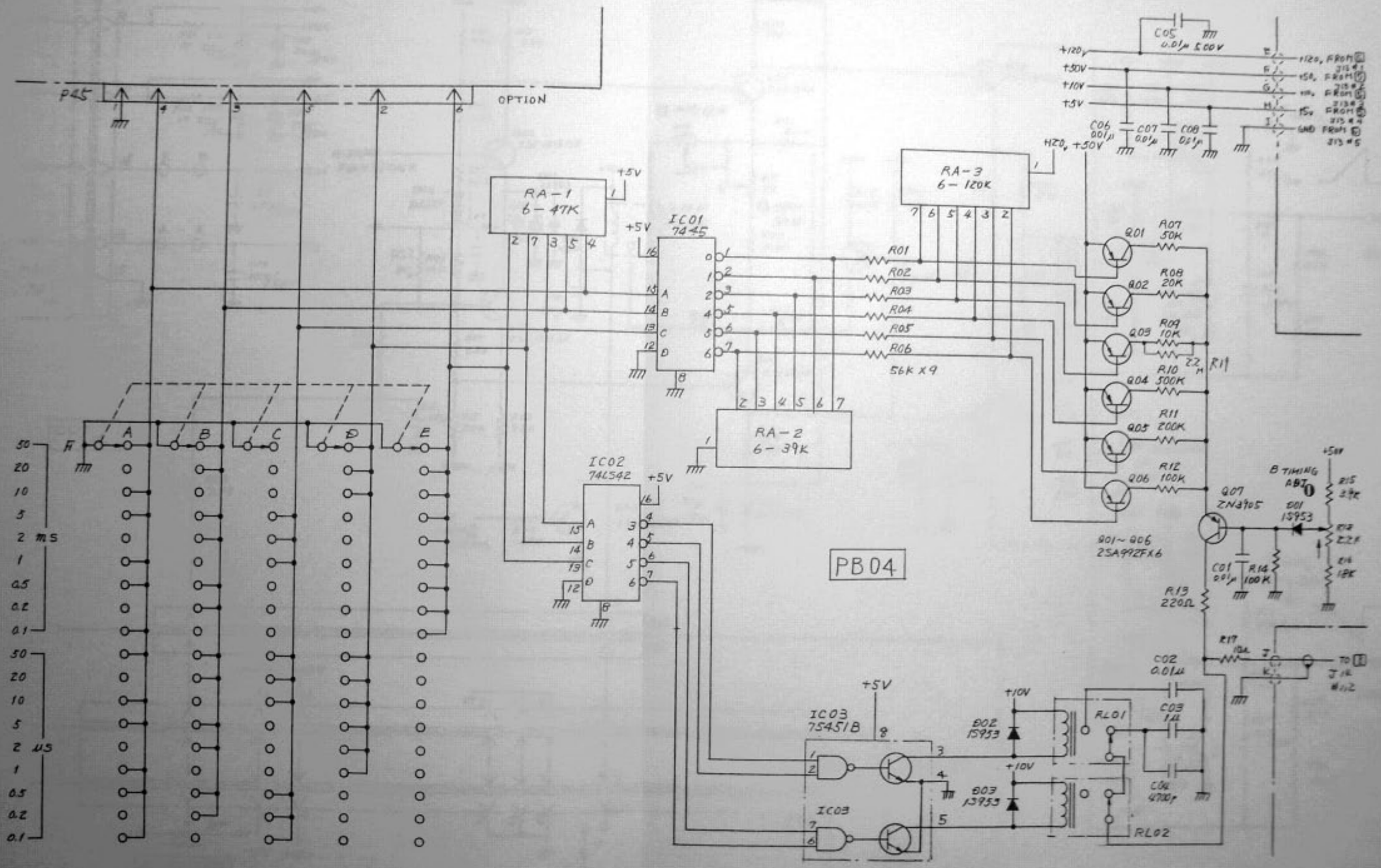
P45
OPTION
RA-1
6-47K
RA-2
6-39K
RA-3
6-120K
IC01
7445
IC02
74LS42
IC03
75451B
R01
R02
R03
R04
R05
R06
56K x 9
R07
50K
R08
20K
R09
10K
R10
500K
R11
200K
R12
100K
Q01~Q06
2SA992FX6
Q07
2N3905
D01
1S953
D02
1S953
D03
1S953
RL01
RL02
PB04
B TIMING
ADJ
C05
0.01μ 500V
C06
0.01μ
C07
0.01μ
C08
0.01μ
C01
0.01μ
C02
0.01μ
C03
1μ
C04
4700p
R13
220Ω
R14
100K
R15
39K
R16
18K
R17
10Ω
+120V
+50V
+10V
+5V
HZ0V
GND
50
20
10
5
2 mS
1
0.5
0.2
0.1
50
20
10
5
2 μS
1
0.5
0.2
0.1
A
B
C
D
E
F
SS-5704/SS-5705
B TIMING
10
KBBSS20026101

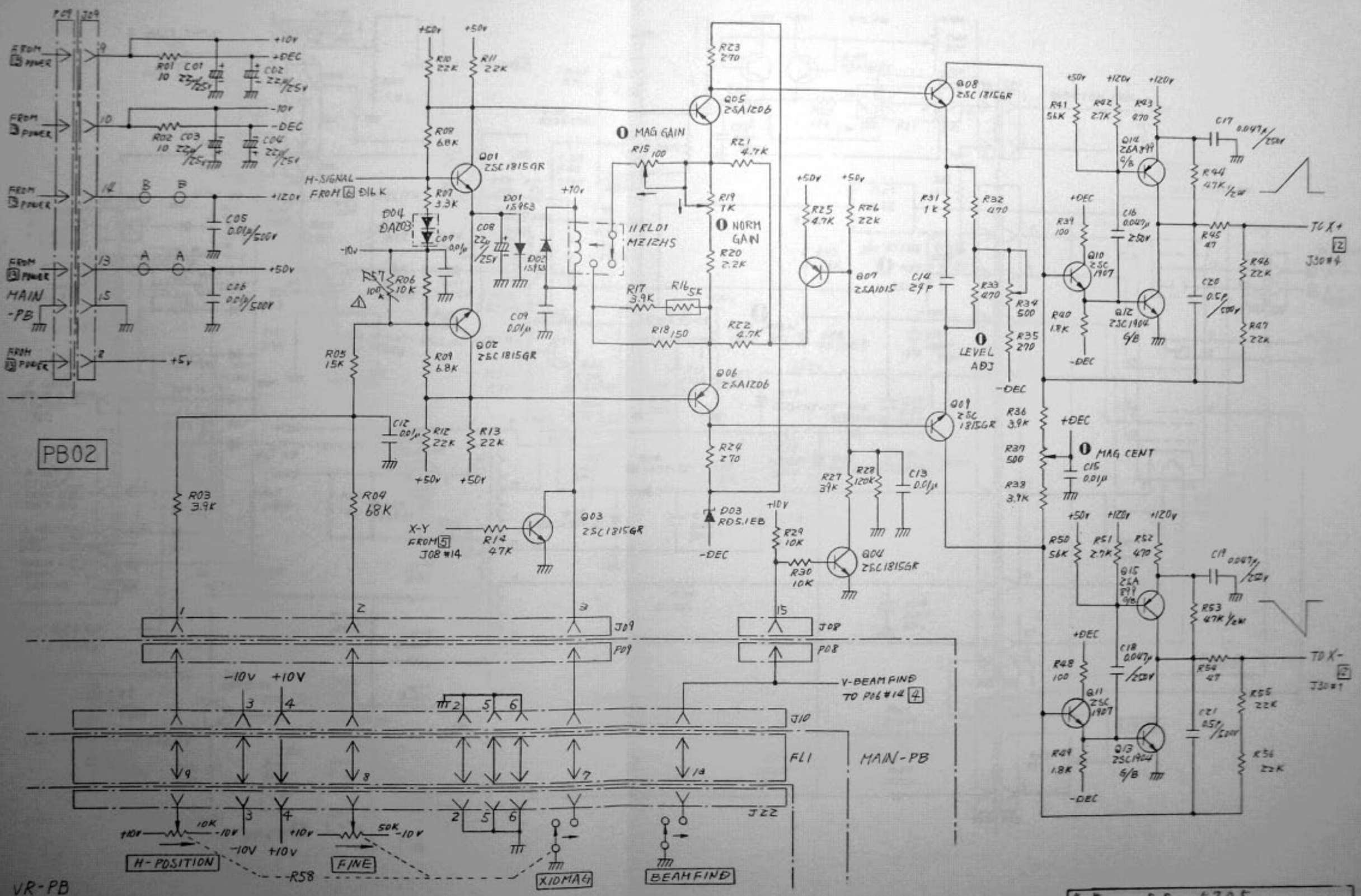
PB02
MAIN-PB
VR-PB
H-POSITION
FINE
X10MAG
BEAMFIND
MAG GAIN
NORM GAIN
LEVEL ADJ
MAG CENT
H-SIGNAL FROM 6 D16 K
X-Y FROM 5 J08 #14
V-BEAM FIND TO P06 #14 4
TO X+ 2 J30 #4
TO X- 2 J30 #1
Q01 2SC1815GR
Q02 2SC1815GR
Q03 2SC1815GR
Q04 2SC1815GR
Q05 2SA1206
Q06 2SA1206
Q07 2SA1015
Q08 2SC1815GR
Q09 2SC1815GR
Q10 2SC1907
Q11 2SC1907
Q12 2SC1904
Q13 2SC1904
Q14 2SA899
Q15 2SA899
D03 RD5.1EB
D04 DA203
D01 1S953
D02 1S953
11RL01 MZ12HS
SS-5705
HORIZONTAL AMPLIFIER
KBBSS24053101

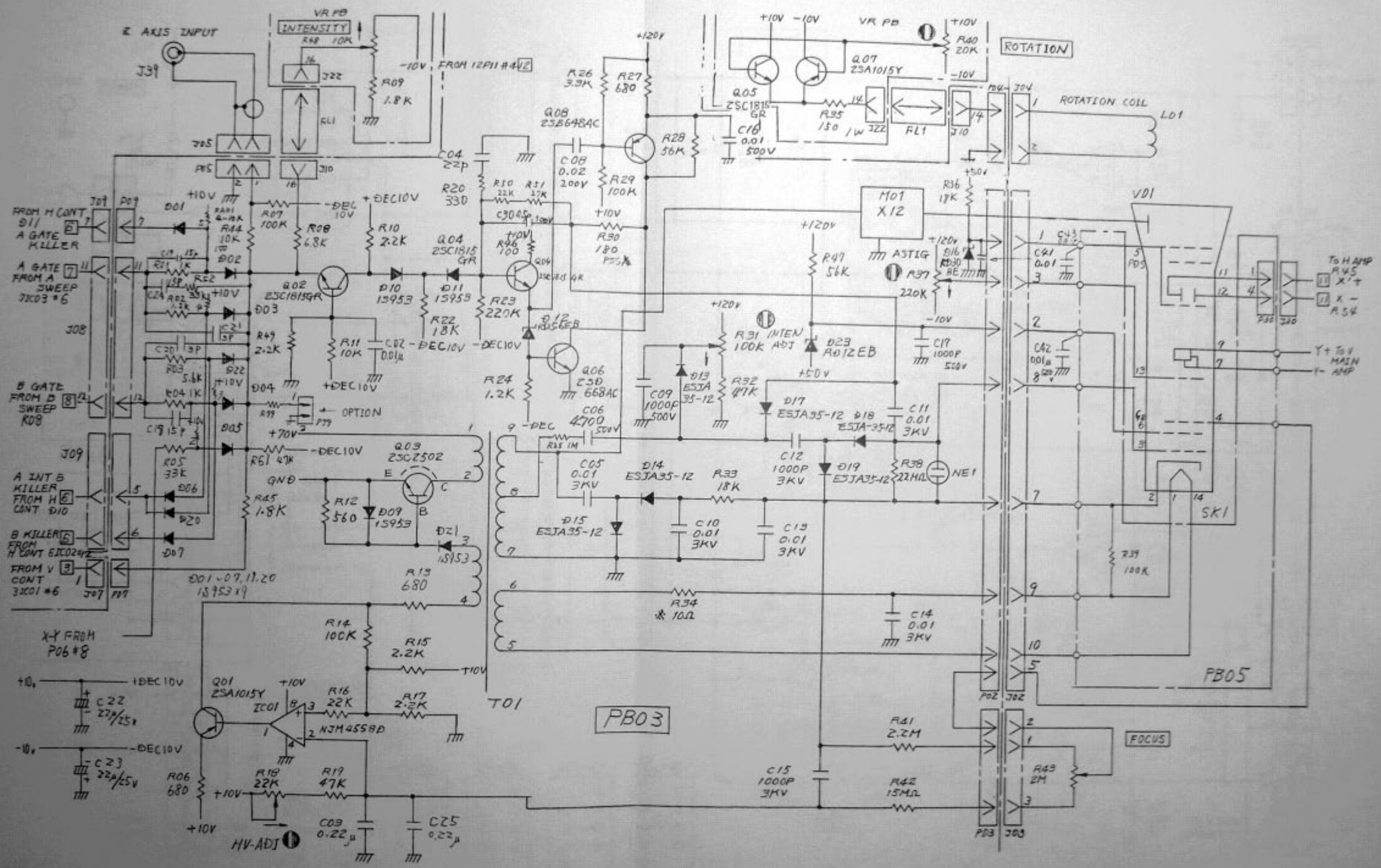

SS-5705

Z AXIS & CRT CIRCUIT

12

KBB SS41014101

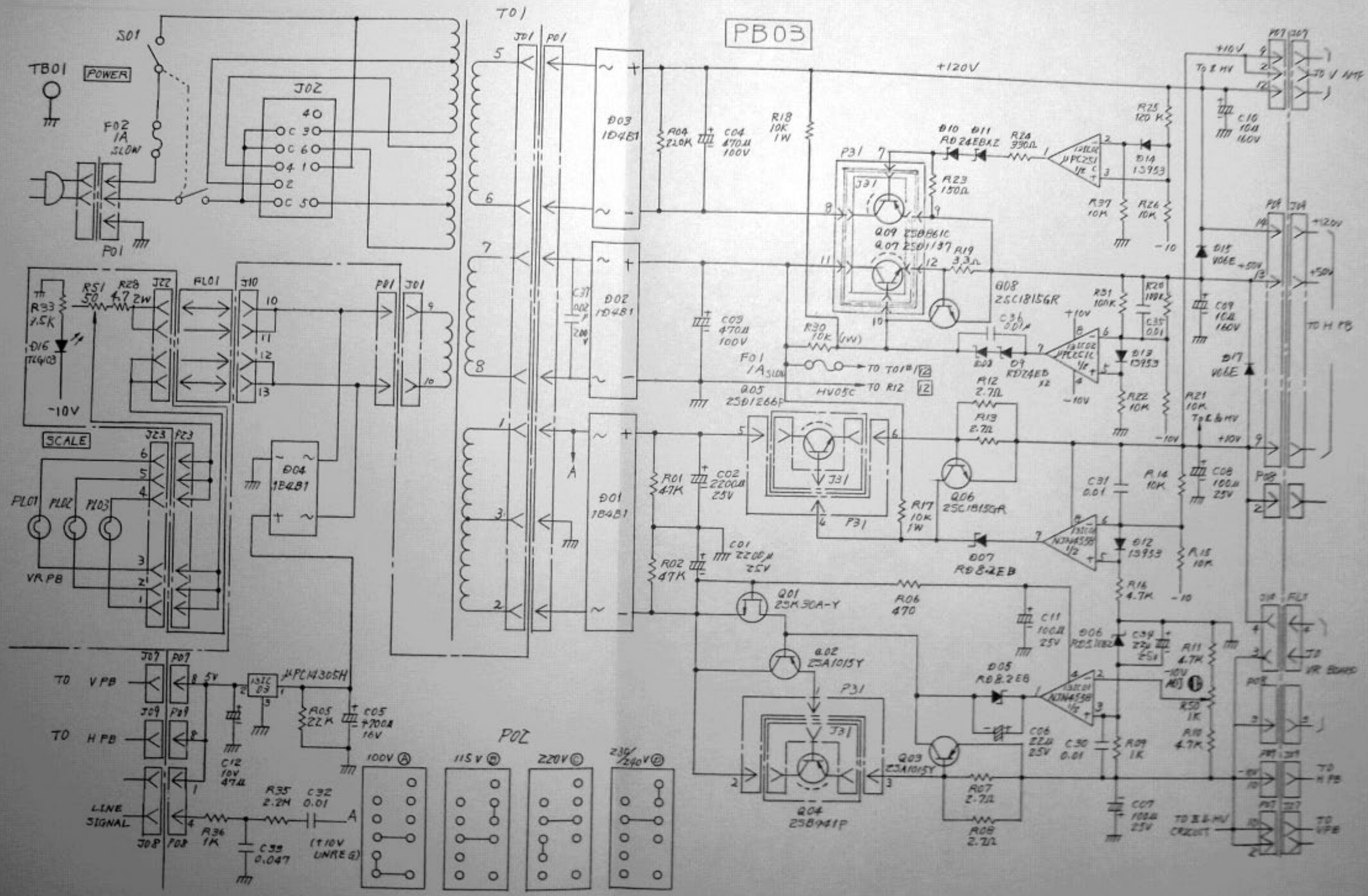
PB03
T01
S01
TB01
POWER
F02
1A
SLOW
J02
P01
R51
50
R28
4.7 2W
J22
FL01
J10
P01
J01
R33
1.5K
D16
TLG103
-10V
SCALE
J23
P23
PL01
PL02
PL03
VR PB
D04
1B4B1
D03
1B4B1
D02
1B4B1
D01
1B4B1
R04
220K
C04
470μ
100V
R18
10K
1W
+120V
P31
J31
Q09 2SB861C
Q07 2SD1137
R19
3.3Ω
Q08
2SC1815GR
R23
150Ω
D10
D11
RD24EBXZ
R24
390Ω
μPC251
D14
1S953
R25
120K
R37
10K
R26
10K
-10
C10
10μ
160V
D15
V06E
+50V
C09
10μ
160V
D17
V06E
TO H PB
C37
0.02μ
200V
C03
470μ
100V
R30
10K (1W)
F01
1A SLOW
TO T01#12
TO R12
HV05C
Q05
2SD1266P
C36
0.01μ
D09
RD24EB
R12
2.7Ω
R13
2.7Ω
Q06
2SC1815GR
R31
100K
R20
100K
C35
0.01
D13
1S953
R22
10K
R21
10K
+10V
-10V
C08
100μ
25V
R14
10K
C31
0.01
R15
10K
D12
1S953
R16
4.7K
R01
47K
C02
2200μ
25V
R17
10K
1W
D07
RD8.2EB
R02
47K
C01
2200μ
25V
Q01
2SK30A-Y
R06
470
C11
100μ
25V
D06
RD5.1UZ
C39
22μ
25V
R11
4.7K
R50
1K
R10
4.7K
Q02
2SA1015Y
D05
RD8.2EB
C06
22μ
25V
C30
0.01
R09
1K
Q03
2SA1015Y
Q04
2SB941P
R07
2.7Ω
R08
2.7Ω
C07
100μ
25V
TO VR BOARD
TO H PB
TO VPB
TO V AMP
TO VPB
TO HPB
LINE SIGNAL
J07
P07
J09
P09
J08
P08
5V
μPC1305H
R05
22K
C05
470μ
16V
C12
10V
47μ
R36
1K
C39
0.047
R35
2.2M
C32
0.01
(+10V UNREG)
P02
100V
115V
220V
230/240V
SS-5704/SS-5708
POWER SUPPLY
13
KBBSS080131